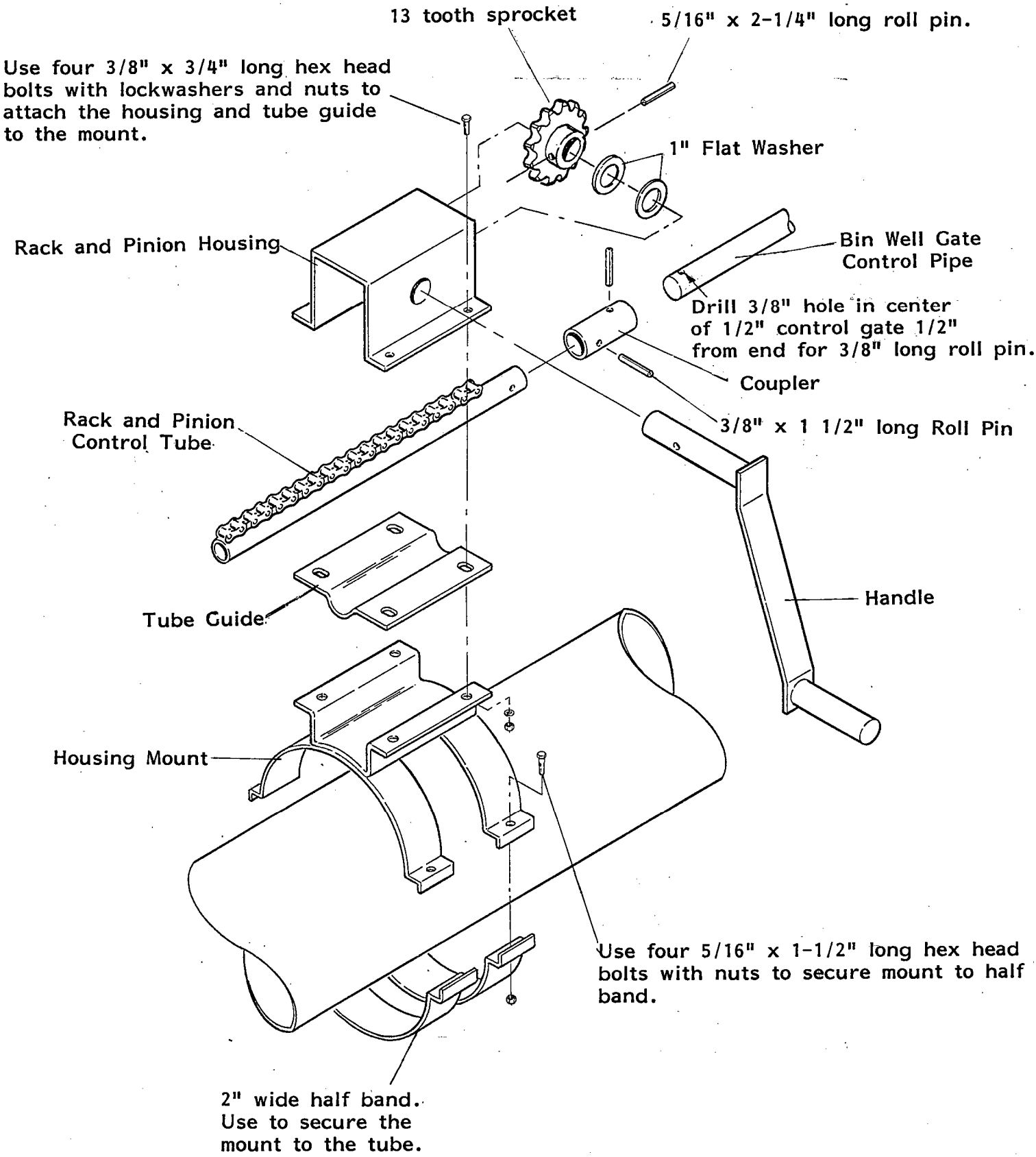8" BIN WELL RACK AND PINION CONTROL ASSEMBLY INSTRUCTIONS